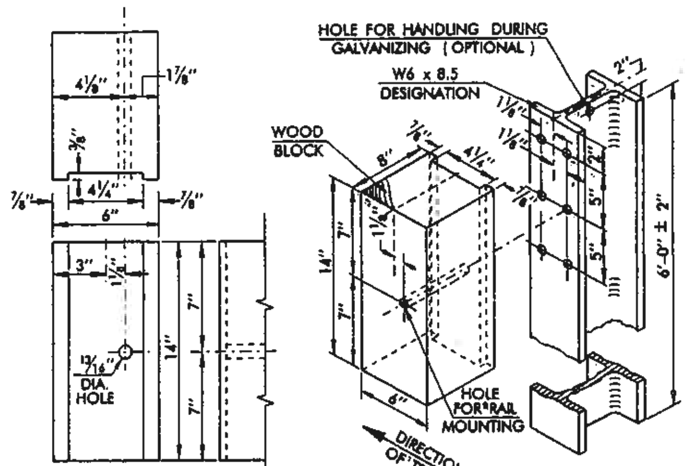

WOOD BLOCKOUT

STEEL POST & WOOD BLOCKOUT

FABRICATED STEEL BEAMS OF THE SAME BASIC DIMENSIONS AND BENDING PERFORMANCE WILL BE AN ACCEPTABLE ALTERNATE. ALL HOLES IN STEEL TO BE 13/16" DIAMETER AND SHALL BE PUNCHED OR DRILLED BEFORE GALVANIZING. USE BOLT NO. 5 TO MOUNT RAIL AND BLOCKOUT TO POST. SEE TABLE OF BOLTS ON THIS SHEET FOR DETAILS. POST UNIT TO BE GALVANIZED AFTER FABRICATION. ON INITIAL INSTALLATION, THE BLOCKOUT AND RAIL ELEMENT SHALL BE ATTACHED TO THE POST USING THE SINGLE HOLE IN THE POST AND BLOCKOUT (ONE BOLT IS REQUIRED). OTHER HOLES IN POST ARE FOR FUTURE VERTICAL ADJUSTMENT. BEAM WASHERS ARE NO LONGER USED.

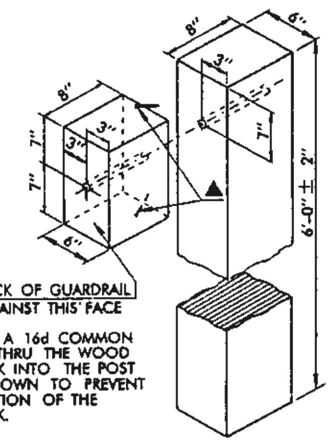

▲ DRIVE A 16d COMMON NAIL THRU THE WOOD BLOCK INTO THE POST AS SHOWN TO PREVENT ROTATION OF THE BLOCK.

WOOD POSTS & BLOCKOUT

ALL HOLES IN WOOD TO BE 3/4" IN DIAMETER AND DRILLED, AS SHOWN ON THE LONGITUDINAL CENTER OF THE 6" FACE AND TREATED WITH AN APPROVED PRESERVATIVE. ON INITIAL INSTALLATIONS, THE RAIL AND BLOCKOUT SHALL BE ATTACHED TO THE POST USING ONE BOLT NO. 2 THROUGH THE RAIL, THE CENTER HOLE IN THE BLOCKOUT AND THE BOTTOM HOLE IN THE THE POST.

OPTIONAL TYPE POSTS OR BLOCKOUTS FOR STANDARD LINE GUARDRAIL

THE CONTRACTOR MAY, AT HIS OPTION, SELECT AND USE ONE OF THE TYPE POSTS SHOWN ABOVE. THIS POST & BLOCKOUT CHOICE MUST BE USED ON THE ENTIRE PROJECT. THE ONLY OBLIGATORY USE OF WOODPOST IS FOR POST NO. 1, AS SHOWN ON ANCHOR UNIT TYPE A. ALTERNATIVE POST & BLOCKOUT COMBINATIONS, INCLUDING RECYCLED MATERIAL, RUBBER, PLASTIC AND COMPOSITE PRODUCTS, MUST BE OF A TYPE WHICH PASSES NCHRP 350, TESTING LEVEL 3, BE SUBMITTED WITH FHWA CERTIFICATION AND BE APPROVED FOR USE BEFORE INSTALLATION.

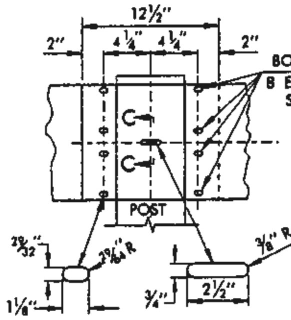

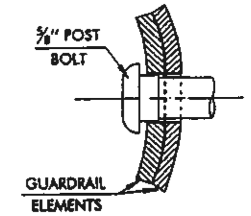

SECTION C–C

GUARDRAIL SHALL BE LAPPED IN THE DIRECTION OF NEAREST TRAFFIC AT ALL LOCATIONS WHERE SPLICES OCCUR (EXCEPT AT NARROW OR ONE LANE BRIDGE APPROACHES, WHERE LAPS SHALL BE TOWARD THE BRIDGE ON BOTH SIDES OF THE APPROACH ROADWAY).

RAIL SPLICE

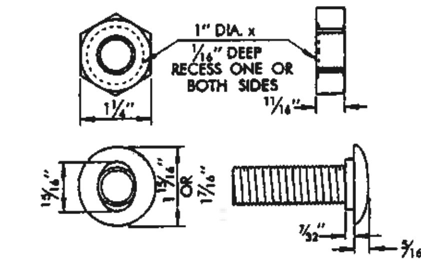

5/8" Ø BUTTON HEAD BOLT & RECESS NUT

ALTERNATE BUTTON HEAD BOLT

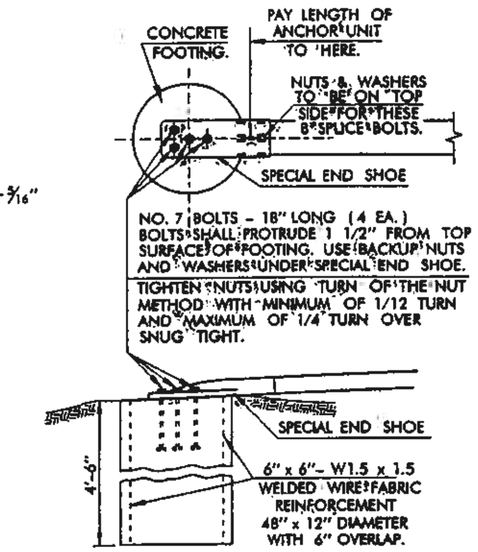

NO. 7 BOLTS – 18" LONG (4 EA.) BOLTS SHALL PROTRUDE 1 1/2" FROM TOP SURFACE OF FOOTING. USE BACKUP NUTS AND WASHERS UNDER SPECIAL END SHOE.

TIGHTEN NUTS USING TURN OF THE NUT METHOD WITH MINIMUM OF 1/12 TURN AND MAXIMUM OF 1/4 TURN OVER SNUG TIGHT.

CLASS A CONCRETE TO BE PLACED INTO 18" DIA. HOLE TO A DEPTH OF APPROX. 4'–6". SHAPE CONCRETE TO DRAIN OR FIT SLOPES. END SHOE MUST REMAIN LEVEL. CLASS A CONCRETE = 0.26 C.Y.

DETAIL OF CONCRETE & BOLTS USED IN ANCHOR

NOTE: PRECAST FOOTING (EQUIV. SIZE & DESIGN) MAY BE SUBSTITUTED FOR CAST-IN-PLACE FOOTING, IF APPROVED BY THE ENGINEER.

DESCRIPTION	REVISIONS	DATE
RE-ISSUE W/ENGLISH 1999 SPECS. Replace Metal Blockout W/Wood, Delete Beam Washer & & Add NCHRP 350 Note	lgc	7/99
Sec. C–C/Rem. Washer, Add Mat.Note	lgc	11/02

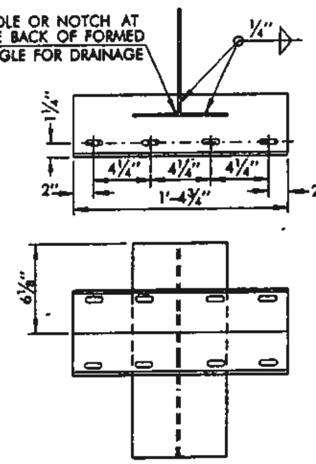

BRIDGE SPECIAL STEEL ANCHOR POST DETAIL

UNIT TO BE GALVANIZED AFTER FABRICATION

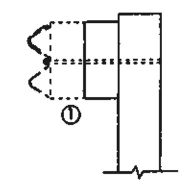

DETAIL ADDITIONAL BLOCKOUTS

① ONE ADDITIONAL BLOCKOUT MAY BE ADDED AND ATTACHED USING EXTENDED BOLT.

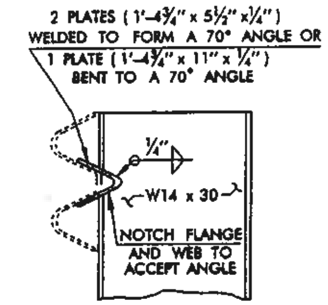

NOTE: GUARDRAIL COMPONENTS SHALL MEET THE APPLICABLE STD'S OF "A GUIDE TO STANDARDIZED HIGHWAY BARRIER RAIL HARDWARE" PREPARED AND APPROVED BY THE AASHTO-ARTBA-AGC JOINT COOPERATIVE COMMITTEE, TECHNICAL BULLETION NO. 268 B.

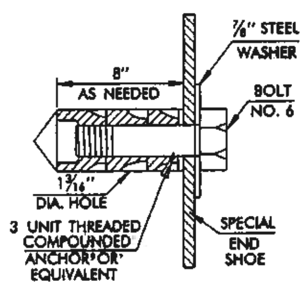

ANCHOR DEVICE
(7/8" BOLT)

USE TO ANCHOR SPECIAL END SHOE TO BRIDGE PIER, BRIDGE CURB, OR TO CONCRETE PARAPET IN LIEU OF BOLTS THROUGH THE PARAPET.

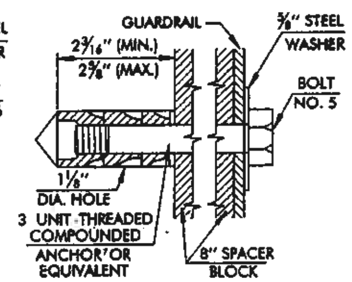

ANCHOR DEVICE
(5/8" BOLT)

USE WHERE CONNECTION IS MADE TO ROUND PIERS, AS IN TYPE C, G, OR GE UNIT.

EQUIVALENT ANCHOR SYSTEM SPECIFICATIONS & DATA

ANCHOR BOLT SIZE	BAR SIZE	BAR DIA. (d)	BOND STRESS (u)	BOND CAPACITY (U)
	#	in.	psi	lb/in
1/2"	4	0.500	667	1048
5/8"	5	0.626	667	1310
3/4"	6	0.750	581	1369
	7	0.875	498	1369
	8	1.000	436	1369
1"	9	1.128	386	1369
	10	1.270	343	1369
1 1/4"	11	1.410	309	1369
1 1/2"	14	1.693	274	1457

ALTERNATIVE ANCHOR BOLT SYSTEMS MEETING THE MINIMUM STRENGTH REQUIREMENTS, AS SHOWN IN THE SPEC. & DATA TABLE ABOVE, MAY BE USED IN ATTACHMENT APPLICATIONS IN LIEU OF COMPOUND OR THROUGH BOLT ANCHORS IF APPROVED BY THE ENGINEER.
WHERE, T = U x L = PULL-OUT STRENGTH
U = BOND CAPACITY PER INCH
L = EMBEDMENT DEPTH IN INCHES

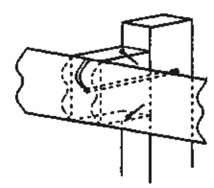

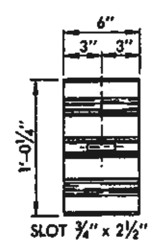

BACKUP CONNECTION PIECE (6")

12 GUAGE GALVANIZED STEEL W-BEAM 6" LONG BOLTED DIRECTLY (BEHIND THE RAIL ELEMENT) TO POST.

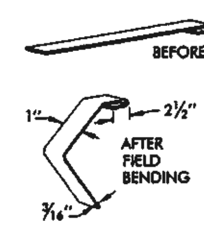

FASTENING CLIP

3/16" x 12" A36 (MILD) GALVANIZED STEEL PLATE FIELD SHAPED WITH A HAMMER FOR A TIGHT FIT. HOOK FITS OVER BACKUP CONNECTION PIECE AND GUARDRAIL ELEMENT TO FORM A WEAKENED CONNECTION. COAT WITH A ZINC-RICH GALVANIZATING PAINT AFTER BENDING.

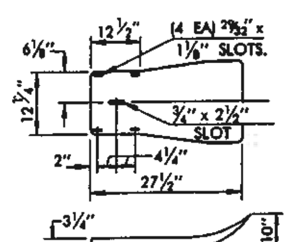

TYPE 1 END SECTION

MATERIALS SHALL MEET THE REQUIREMENTS OF THE FOLLOWING SUBSECTIONS OF THE 1999 STD. SPEC'S.

PORTLAND CEMENT CONCRETE	701
REINFORCING STEEL	723
◀ G. RAIL POSTS & SPACER BLOCKS	727 & 732
METAL PLATE STEEL BEAM	732
FITTINGS	732
GALVANIZATION	732

ALL DIMENSIONS ARE SUBJECT TO MANUFACTURER'S TOLERANCE.

◀ WOOD POSTS SHALL MEET THE REQUIREMENTS OF STRESS GRADE 1200F OF SECTION 727.

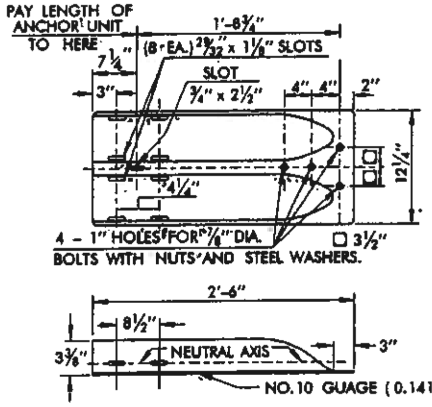

SPECIAL END SHOE

TABLE OF BOLTS, NUTS, & WASHERS

ITEM	ASSEMBLY	NOMENCLATURE & DIMENSIONS
② BOLT 1	RECESS NUT & SPECIFIED WASHER	5/8-11 UNC – 2A x 1 1/4" LONG BUTTON HEAD W/ OVAL SHOULDER.
② BOLT 2	RECESS NUT & STEEL WASHER	5/8-11 UNC – 2A x 18" LONG BUTTON W/ OVAL SHOULDER.
② BOLT 3	HEX NUT & LOCK WASHER	5/8-11 UNC – 2A x 1 1/2" LONG HEX-HEAD BOLT.
② BOLT 4	RECESS NUT & 5/8" STEEL WASHER	5/8-11 UNC – 2A x __ " LONG BUTTON HEAD W/OVAL SHOULDER.
② BOLT 5	5/8" STEEL WASHER & ANCHOR DEVICE	5/8-11 UNC – 2A x 10 1/2" LONG HEX-HEAD BOLT.
① ② BOLT 6	7/8" STEEL WASHER & ANCHOR DEVICE	7/8- 9 UNC – 2A x 8" LONG HEX-HEAD BOLT.
① ③ BOLT 7	7/8" STEEL WASHER & 7/8" HEX NUT	7/8- 9 UNC – 2A x __ " LONG HIGH STRENGTH STL. HEX-HEAD BOLT
⑥ RECESS NUT		5/8-11 UNC – 2B SEMI-FINISHED.
⑥ 5/8" HEX NUT		5/8-11 UNC – 2B SEMI-FINISHED.
① ④ 7/8" HEX NUT		7/8- 9 UNC – 2B SEMI-FINISHED.
⑤ 5/8" STEEL WSHR.		11/16" x 1 3/4" x 0.141" TYPE A PLAIN WASHER.
⑤ 7/8" STEEL WSHR.		15/16" x 2 1/4" x 0.156" TYPE A PLAIN WASHER.
① LOCK WASHER		11/16" I.D. GALVANIZED STANDARD HARDWARE ITEM.

① NOT A STANDARD ITEM IN "A GUIDE TO STANDARIZED HIGHWAY BARRIER RAIL HARDWARE".TECHNICAL BULLETIN #268–B.
② SHALL MEET REQUIREMENTS OF A.S.T.M. A307 & A153.
③ SHALL MEET REQUIREMENTS OF A.S.T.M. A325 OR A449 & A153.
④ SHALL MEET REQUIREMENTS OF A.S.T.M. A153 & A563 GRADE B OR BETTER.
⑤ SHALL MEET REQUIREMENTS OF A.S.T.M. A153 & A.N.S.I. B27.2.
⑥ SHALL MEET REQUIREMENTS OF A.S.T.M. A153 & A563. GRADE A OR BETTER.

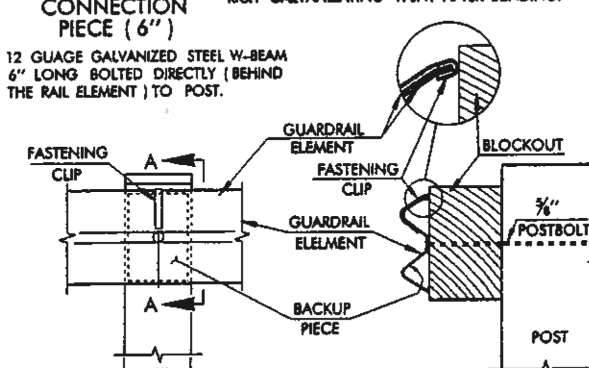

SECTION A–A

DETAIL OF WEAKENED CONNECTION

NOTE: WEAKENED CONNECTION TO BE USED ONLY WITH GUARDRAIL ANCHOR UNIT TYPE A. SEE ROADWAY STD. GRAU1-1, SHEET NO. R-132E.

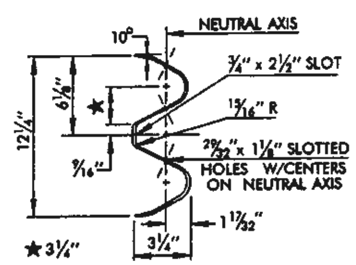

SECTION THRU 12 GAUGE STEEL RAIL ELEMENT

MAY VARY DUE TO TOLERANCES. NOMINAL THICKNESS OF 0.105", EXCLUSIVE OF PROTECTIVE COATING.

BASIS OF PAYMENT

ITEM NO.	ITEM	UNIT
623.06 (B)	BEAM GUARDRAIL (W-BEAM) SINGLE	L.F.

APPROVED BY ROADWAY ENGINEER Brian C. Schmitt DATE 11/01/02

OKLAHOMA DEPT. OF TRANSPORTATION
ROADWAY STANDARD (ENGLISH)

GUARDRAIL HARDWARE

1999 SPECIFICATIONS | GRH–3 | 01E | R–134E