OKLAHOMA DEPARTMENT OF TRANSPORTATION					
FED. ROAD DIST. NO.	STATE	JOB PIECE NO.	FISCAL YEAR	SHEET NO.	TOTAL SHEETS
6	OKLA.	21899(04)			

REVISIONS

DESCRIPTION	DATE
1 Updated Details	08/22/2016

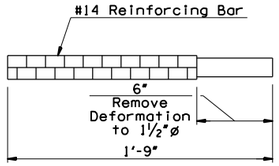

ABUTMENT ANCHOR BAR DETAIL

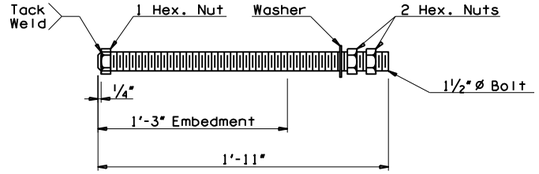

PIER ANCHOR BOLT DETAIL

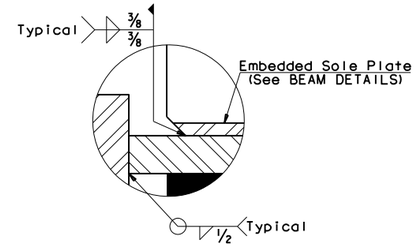

DETAIL "A"

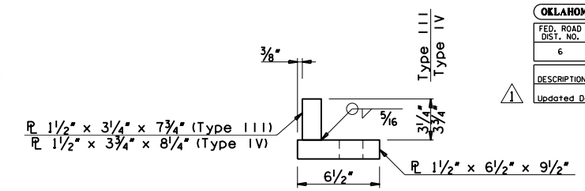

BUILT-UP CONTACT ANGLE DETAIL

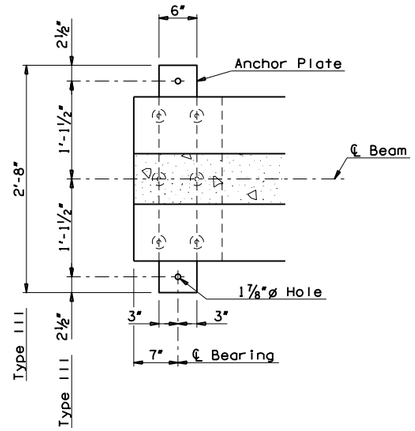

PLAN

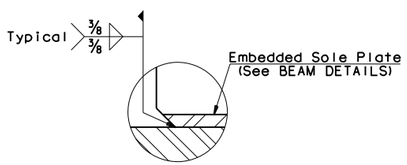

DETAIL "B"

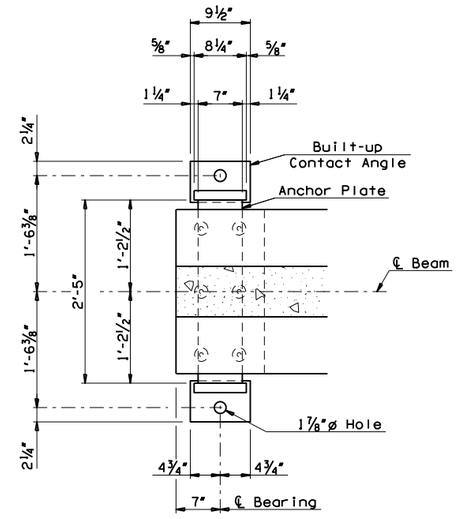

1 FIXED PIER BEARING PLAN
(Pier No. 2 - Type IV)

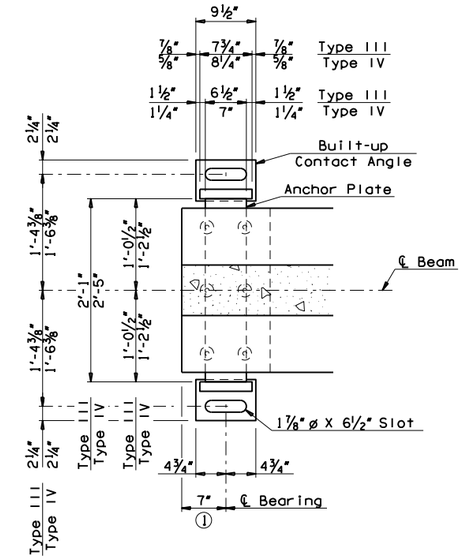

EXPANSION BEARING PLAN
(Pier Nos. 1 & 3)

1 Anchor Bolts shall be centered in slots during setting of beams. Dimension may vary depending on temperature at the time of beam setting.

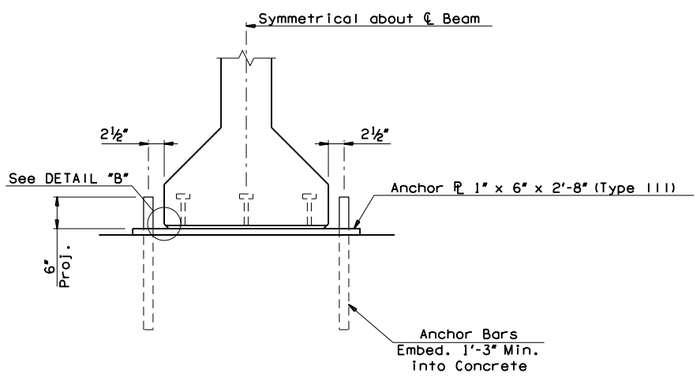

END VIEW

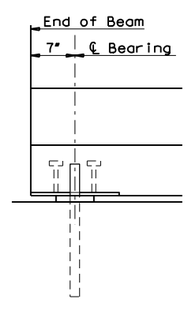

SIDE VIEW

FIXED ABUTMENT BEARING DETAILS

1 BEARING PAD SCHEDULE

LOCATION		60 DUROMETER ELASTOMERIC BEARING PAD				
		SIZE (T x L x W)	COVER LAYER	INNER LAYER	LAMINATE LAYER	WEIGHT 2
ABUTMENT NO. 1						79.70
PIER NO. 1	BACK STA.	3⅛" x 6" x 1'-10"	2 - ¼"	5 - ⅜"	6 - ⅛"	174.40
	FWD. STA.	3⅝" x 6½" x 2'-2"	2 - ¼"	6 - ⅜"	7 - ⅛"	196.50
PIER NO. 2	BACK STA.	3⅝" x 6½" x 2'-2"	2 - ¼"	6 - ⅜"	7 - ⅛"	196.50
	FWD. STA.	3⅝" x 6½" x 2'-2"	2 - ¼"	6 - ⅜"	7 - ⅛"	196.50
PIER NO. 3	BACK STA.	3⅝" x 6½" x 2'-2"	2 - ¼"	6 - ⅜"	7 - ⅛"	196.50
	FWD. STA.	3⅛" x 6" x 1'-10"	2 - ¼"	5 - ⅜"	6 - ⅛"	174.40
ABUTMENT NO. 2						79.70

2 Total estimated weight of Structural Steel per Bearing Assembly.

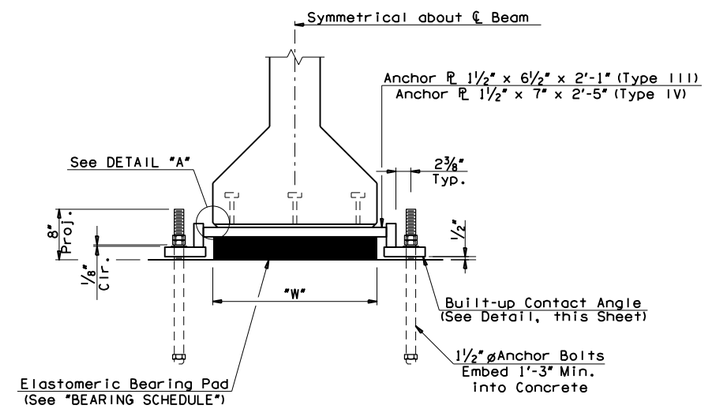

END VIEW

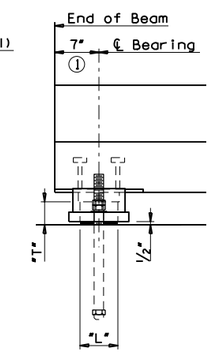

SIDE VIEW

1 BEARING DETAILS

145TH OVER I-44 TULSA & ROGERS COUNTIES BRIDGE "A"	DESIGN	JMQ	1/14
	DETAIL	SJL	2/14
BEARING DETAILS	CHECK	BRT	3/14
	GARVER		
STATE OF OKLAHOMA	DEPARTMENT OF TRANSPORTATION		
	JOB PIECE NO. 21899(04)	SHEET NO. 125	