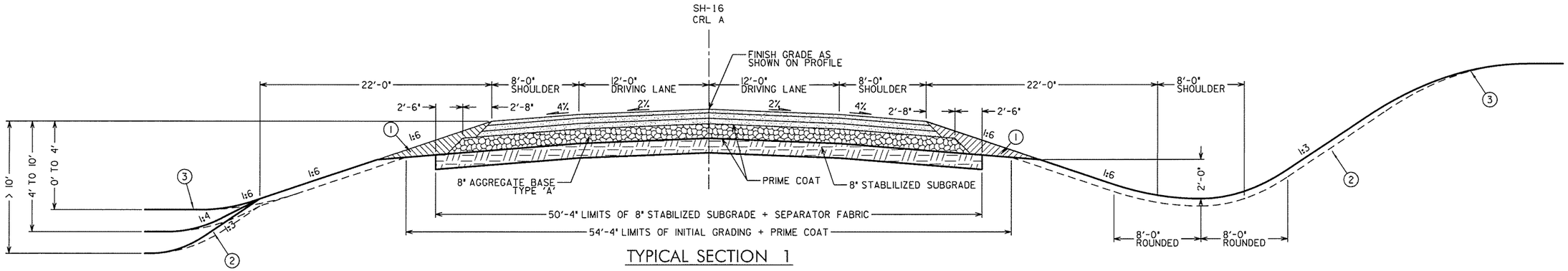

FILL SECTION

TYPICAL SECTION 1

SH-16

STA 103+10.93 TO 124+63.50

STA 124+86.50 TO 136+56.59

STA 136+97.20 TO 149+47.26

ASPHALT CONCRETE REQUIREMENT - SH-16		
8" PAVT. STRUCTURE	12'-0" DRIVING LANES	8'-0" PAVED SHOULDERS
SURFACE COURSE	2" SUPERPAVE TYPE S4 PG (64-22 OK)	2" SUPERPAVE TYPE S4 PG (64-22 OK)
BASE COURSE	3" SUPERPAVE TYPE S3 PG (64-22 OK)	3" SUPERPAVE TYPE S3 PG (64-22 OK)
	3" SUPERPAVE TYPE S3 PG (64-22 OK)	3" SUPERPAVE TYPE S3 PG (64-22 OK)

CUT SECTION

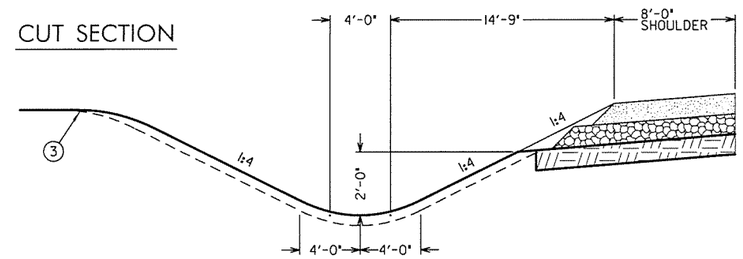

ALTERNATE LEFT-SIDE CUT SECTION

STA 103+10.93 TO 107+41.00

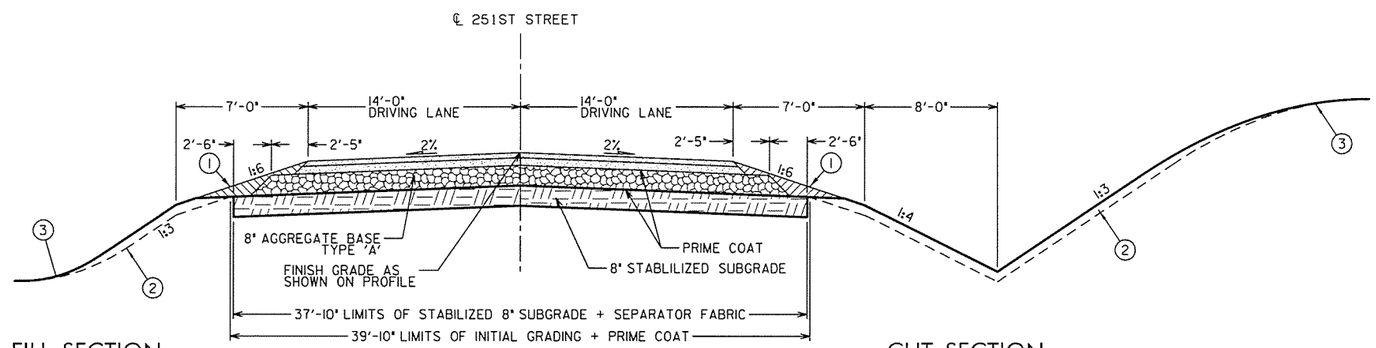

FILL SECTION

CUT SECTION

TYPICAL SECTION 2

251ST STREET

STA 8+01.54 TO 12+46.26

ASPHALT CONCRETE REQUIREMENT - 251ST STREET	
5" PAVT. STRUCTURE	14'-0" DRIVING LANES
SURFACE COURSE	2" SUPERPAVE TYPE S4 PG (64-22 OK)
BASE COURSE	3" SUPERPAVE TYPE S3 PG (64-22 OK)

(1) BACKFILL NOTE:

To Be Backfilled As Part Of The Finishing Operations. Cost To Be Included In T.B.S.C. Type E.

(2) TOPSOIL NOTE:

The Contractor Shall Strip All Of The Available Topsoil, Stockpile It, And Place It Back On The Section In Accordance with Section 205 Of The Standard Specifications. Reserved Topsoil Shall Be Spread First On The Completed Slopes Of The Cut Sections And The Remainder On Completed Fill Slopes Or Other Priority Areas Located By The Engineer. All Additional Costs Associated With Operations Shall Be Included In The Pay Item Salvaged Topsoil, Lump Sum.

The Grading Line As Shown On The Typical And Cross Sections Is To The Top Of The Topsoil. Earthwork Quantities Were Not Adjusted for Salvage and The Topsoil Quantity Is Included In The mass Line Balance.

(3) SEE ROUNDING DETAIL SHEET 3.

DESIGN	KMW	1-16	S.H.-16 OVER CHICKEN CREEK
DRAWN	KMW	4-16	
CHECKED	TAC	5-16	TYPICAL SECTIONS
APPROVED			
SQUAD	SCHEMMER		STATE JOB NO. 28858(04) SHEET NO. 2
			CREEK COUNTY SH-16

JP28858_04Typical01_N.dgn

6/6/2016